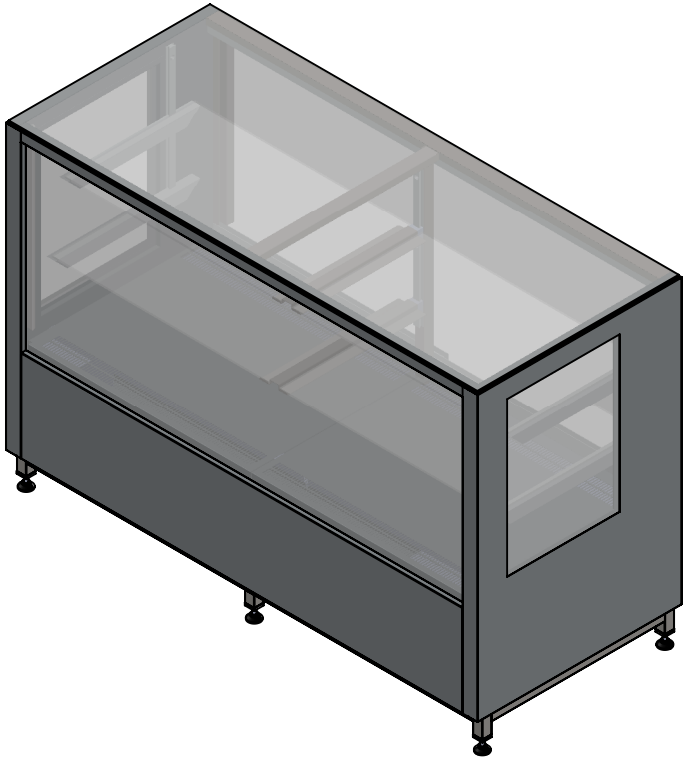

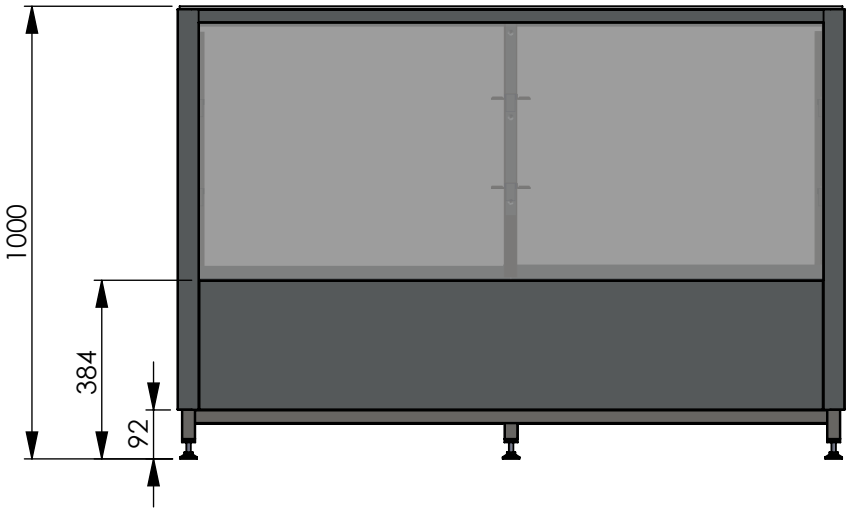

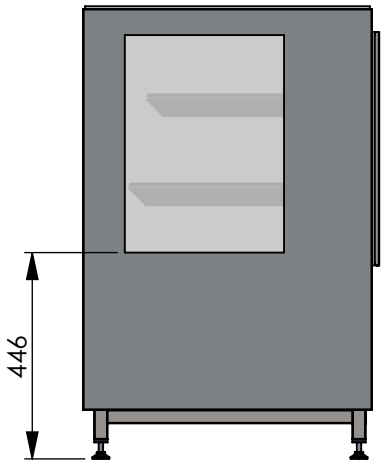

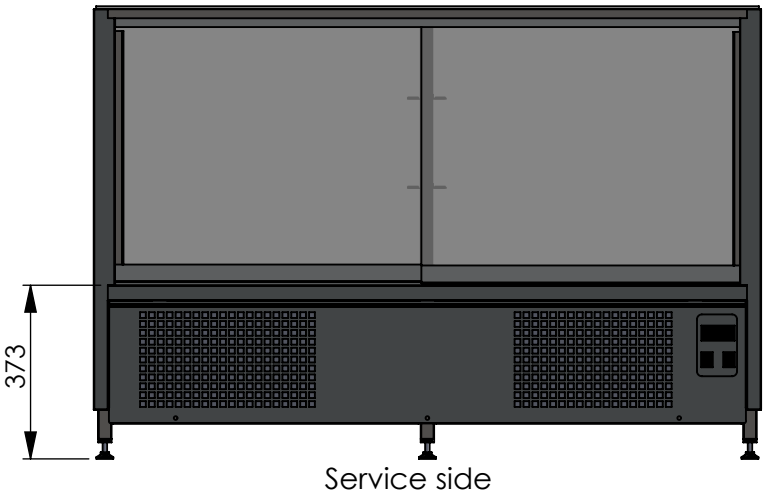

Colly 1500